TRANSFLUID

LLOYD'S REGISTER · LRQA
ISO 9001

TRANSFLUID
trasmissioni industriali

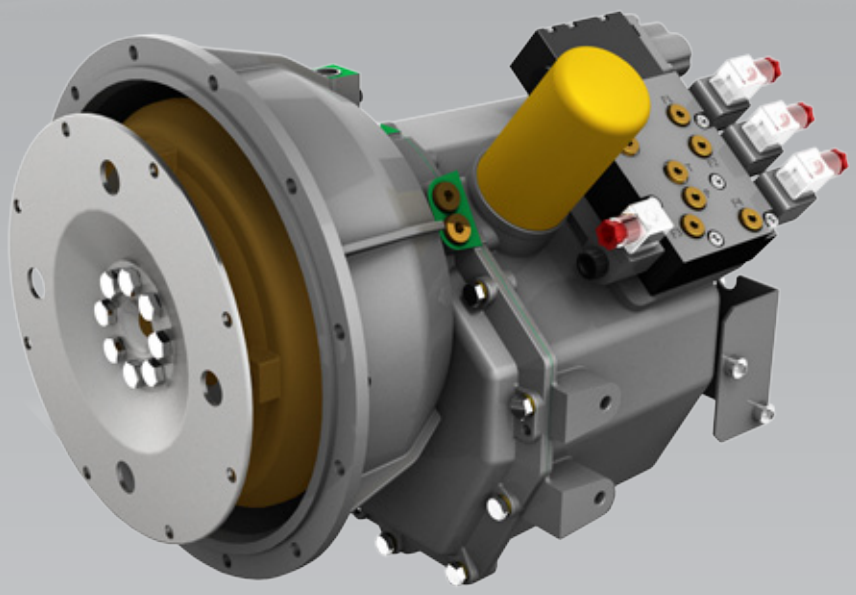

drive with us

POWER SHIFT TRANSMISSIONS

REVERMATIC 11-700 power shift with torque converter

The **REVERMATIC** is a Power shuttle transmission specifically designed for industrial applications requiring quick directional reversing and smooth clutch engagement.
It consists of an hydraulically activated gear unit, the forward and reverse multiple disc clutch assemblies are mounted on the lay shaft and input shaft respectivly . They are operated by the hydraulic selector, electrically actuated, with a patented built-in “soft shift” device.
The trasnmission input shaft is connected to engine flywheel through a single stage torque converter which is selected in according to the engine rating and required transmission vehicle performances, thanks to its characteristics it eliminates the mechanical connectionbetween engine and driven machine allowing smooth power transfer.

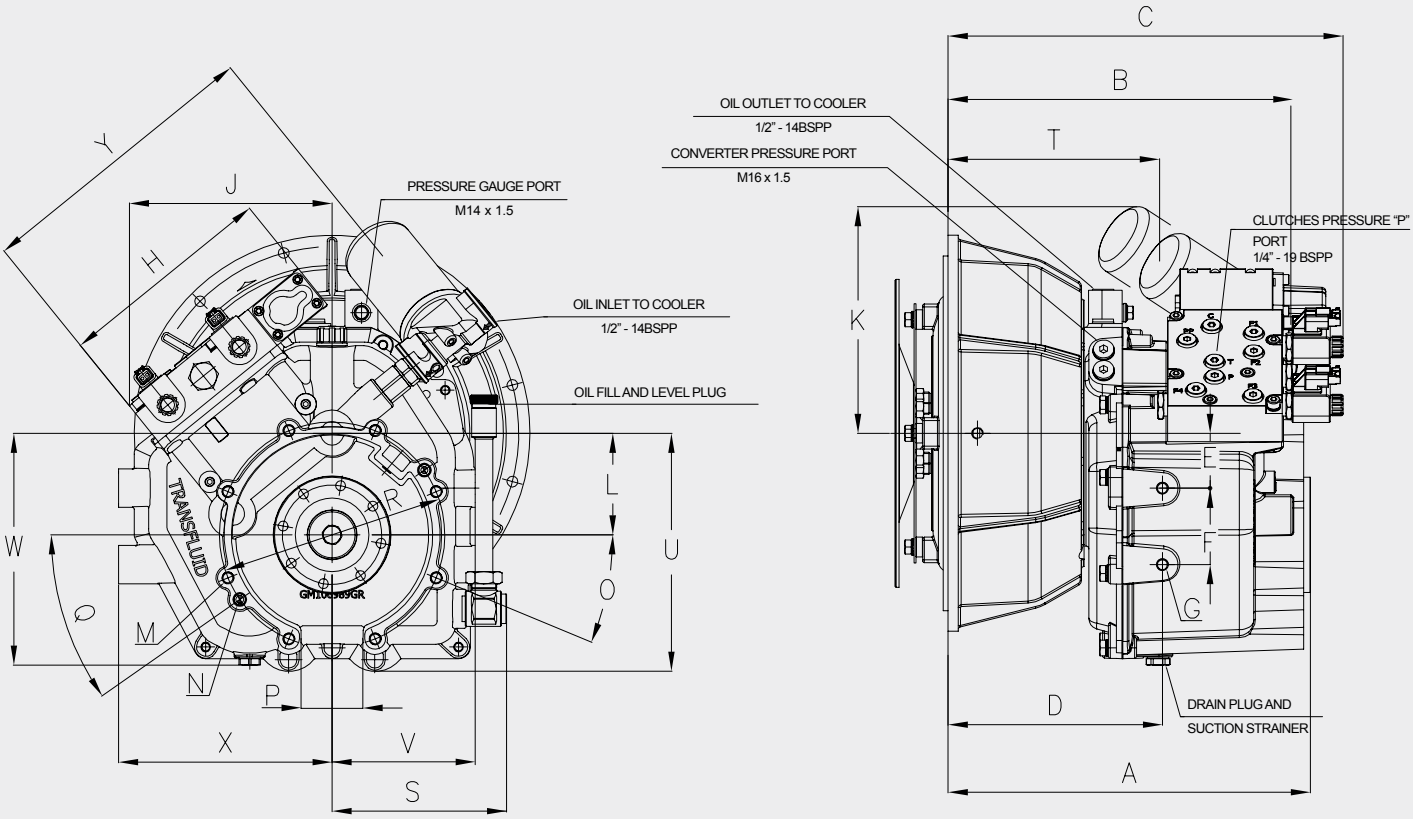

DIMENSIONS mm (inch)																												
SAE INPUT	FLANGE OUTPUT	A	B	C	D	E	F	G dia x deplh	Nr	H	J	K	L	M dia x deplh	Nr	N dia x deplh	Nr	O	P	Q	R	S	T	U	V	W	X	Y
3-10”	DIN 120	369.7	352	403	219	56	78	M12X25	4	222	207	231	104	M12X21	8	12X12	2	22.5°	63	35°	230	178	216	243	146	236.5	218	297
4-10”	SAE 1410	(14.555)	(13.858)	(15.866)	(8.622)	(2.205)	(3071)	(M12x0.98)		(8.74)	(8.15)	(9.094)	(4.094)	(M12x0.83)		(0.472x0.472)			(2.48)		(9.055)	(7.008)	(8.504)	(9.567)	(5.748)	(9.311)	(8.583)	(11.693)

TECHNICAL DATA										
RATIO FWD = REV	WEIGHT w/o oil	OIL QTY.	MAX POWER	MAX TORQUE	MAX SPEED	SOLENOIDS	OPERATING PRESSURE OIL	FILTER	OIL COOLER	MAX OPERATING TEMP.
0.85 : 1 1.04 : 1 1.40 : 1 1.88 : 1 2.25 : 1	102 kg (225 lb)	7 l (1.85 gal)	70 kW (100 hp)	700 Nm (516 lbft)	2800 rpm	12/24 Vdc 27 W	14 bar (203 psi)	25 micron	max 24 kW (32 hp) 3 bar (43 psi) 1.5 l (0.4 gal) /min/100 rpm	100° C (212° F)

The **RANGERMATIC** is a multi-speed power shift transmission available in one, two or three speeds forward and one or two speeds reverse. Designed for industrial applications it provides quick and smooth reversing and easy gear selection on the go.
Consisting of a double gear train, actuated by self-contained hydraulic clutches, it connects to the engine through a wide range of hydrodynamic single stage torque converters. The torque converter is selected to optimize the driven machine performances.
Additionally it eliminates the mechanical connection between the engine and the driven machine allowing smooth power transfer. The hydraulic clutches are operated by a hydraulic selector, electrically actuated, with built-in a patented “soft shift” device.

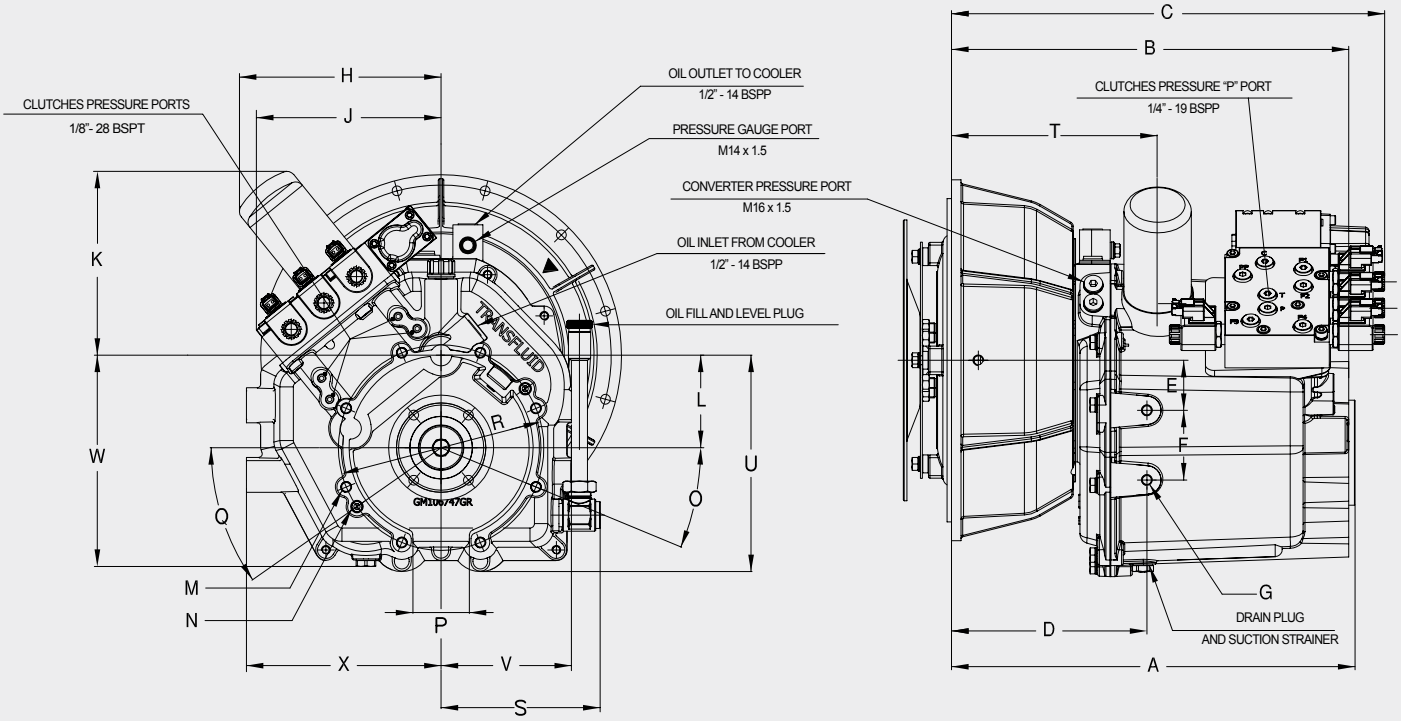

DIMENSIONS mm (inch)																											
SAE INPUT	FLANGE OUTPUT	A	B	C	D	E	F	G dia x deplh	G Nr	H	J	K	L	M dia x deplh	M Nr	N dia x deplh	N Nr	O	P	Q	R	S	T	U	V	W	X
3-10” 4-10”	DIN 120 SAE 1410	451.7 (17.784)	444.7 (17.508)	485 (19.094)	218.7 (8.610)	56 (2.205)	78 (3.071)	M12x25 (M12x0.98)	4	229 (9.016)	207 (8.150)	206 (8.110)	103.5 (4.075)	M12x21 (M12x0.83)	8 at 45°	12x12 (0.472x0.472)	2 at 180°	22.5°	63 (2.480)	35°	230 (9.055)	178 (7.008)	230 (9.055)	243 (9.567)	146 (5.748)	237 (9.331)	218 (8.583)

TECHINICAL DATA					
RATIO			WEIGHT w/o oil		
31-700 Version	21-700 Version	22-700 Version	31-700 Version	21-700 Version	22-700 Version
2.75-1.882-0.865 FWD 1.882 REVERSE	2.75-1.882 FWD 1.882-0.865 FWD 1.882 REVERSE	1.882-0.865 FWD 1.882-0.865 REVERSE	123 kg (271 LB)	117 kg (258 LB)	120 kg (265 LB)

TECHNICAL DATA									
OIL QTY.	POWER ON ROAD	POWER OFF ROAD	MAX TORQUE	MAX SPEED	SOLENOIDS	OIL OPERATING PRESSURE	FILTER	OIL COOLER	MAX OPERATING TEMP.
8 l (2.11 gal)	95 kW (125 hp)	70 kW (100 hp)	700 Nm (516 lbft)	2800 rpm	12/24 V 27 W	14 bar (203 psi)	25 micron	max 24 kW (32 hp) 3 bar (43 psi) 1.5 l (0.4 gal) /min/100 rpm	100° C (212° F)

REVERMATIC 11-700 RBD
SPD11S "PTO" for Revermatic & Rangermatic

REVERMATIC 11-700 RBD: Suitable for industrial applications and as marine transmission when combined with the thrust bearing kit mounted on the output shaft assembly and suitable marine oil cooler. It can be installed on engines with flywheel and flywheel housing according to SAE J 617, J 620 standard. The use of patented built in soft shift device allows smooth shifting from forward to reverse rotation for confortable docking and manouvering. The RBD elastic coupling dampens torsional vibration and compensate for radial and angular misalignments.

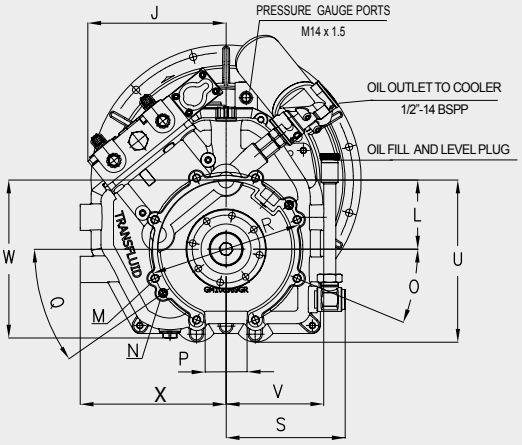

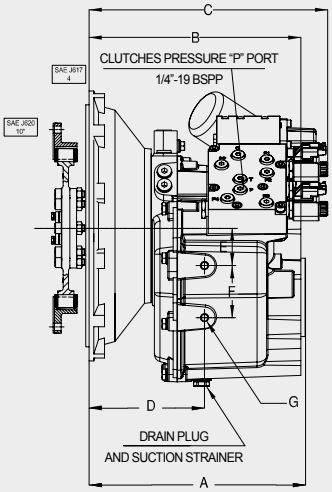

THRUST BEARING KIT

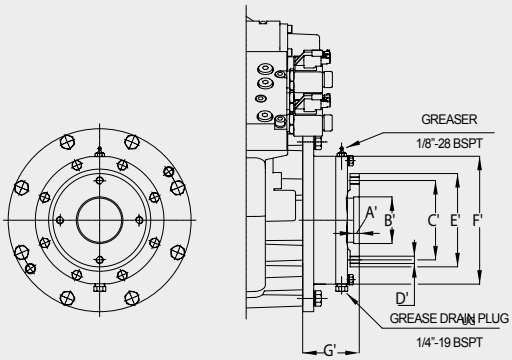

TECHNICAL DATA								Max Thrust
A'	B'	C'	D'		E'	F'	G'	14000
7.5 (0.295)	63.5 H8 (2.5)	108 +0.2 (4.25 +0.006)	M10x12.5 (M10x0.492)	4	127 (5)	174 (6.85)	77 3.03)	

DIMENSIONS mm (inch)																								
SAE INPUT	FLANGE OUTPUT	A	B	C	D	E	F	G dia x deplh	G Nr	J	L	M dia x deplh	M Nr	N dia x deplh	N Nr	O	P	Q	R	S	U	V	W	X
4-10"	DIN 120 SAE 1410	323.8 (12.748)	316.8 (12.472)	357 (14.055)	172.8 (6.803)	56 (2.205)	78 (3.071)	M12x25 (M12x0.98)	4	207 (8.150)	103.5 (4.075)	M12x21 (M12x0.83)	8 at 45°	12x12 (0.472x0.472)	2 at 180°	22.5°	63 (2.480)	35°	230 (9.055)	178 (7.008)	243 (9.567)	146 (5.748	236.5 (9.311)	218 (8.583)

TECHNICAL DATA										
RATIO FWD = REV	WEIGHT w/o oil	OIL QTY.	MAX POWER	MAX TORQUE	MAX SPEED	SOLENOIDS	OPERATING PRESSURE OIL	FILTER	OIL COOLER MARINE (1)	MAX OPERATING TEMP.
0.85 : 1 1.04 : 1 1.40 : 1 1.88 : 1 2.25 : 1	85 kg (187 lb)	3 l (0.8 gal)	130 kW (175 hp)	560 Nm (442 lbft)	3500 rpm	12/24 Vdc 27 W	12 bar (174 psi)	25 micron	max 10 kW (13 hp) 3 bar (43 psi) 1.5 l (0.4 gal) /min/100 rpm	100° C (248° F)

(1) For industrial application see pag. 1

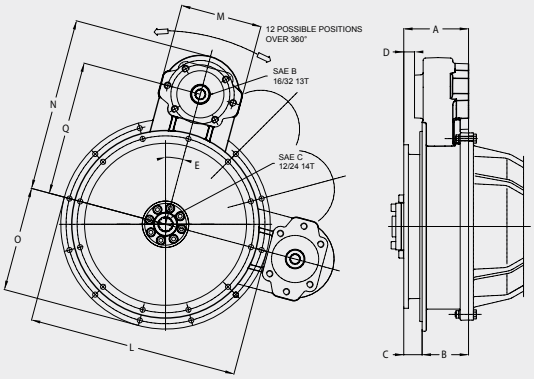

SPD11ST: high capacity pump drive installed between the engine flywheel housing and Revermatic or Rangermatic transmission (with torque converter). Compact in length, the SPD11S can be rotated 360° to provide the user the best pump pad position for the application.

DIMENSIONS mm (inch)											
SAE INPUT	SAE OUTPUT FOR TRANSMISSION	A	B	C	D	E	L	M	N	O	Q
3-11"	4-10"	139.6 (5.496)	100 (3.937)	39.6 (1.559)	23.2 (0.913)	15°	451 (17.756)	176.5 (6.949)	374 (14.724)	226 (8.898)	290 (11.417)

TECHNICAL DATA				
MAX WEIGHT	MAX INPUT TORQUE	HEAD TORQUE	MAX SPEED	GEAR RATIO
50 kg (110 lb)	860 Nm (634 lbft)	350 Nm (258 lbft)	3000 rpm	0.93

DROP BOX: Can be **flange mounted or remote mounted** to Revermatic or Rangermatic. Drop box can be rotated 360° to allow the user the optimal positioning of the output flanges available for 2wd or 4wd. The optional **SL750 PARKING** BRAKE is spring loaded, oil pressure released.It is operated by transmission oil pressure through a dedicated solenoid valve.
The SL750 doesn't require a dedicated oil source or specific control, but it can also be operated from an external source. When equipped with the Rangermatic or Revermatic, the SL750 is installed with steel pipes for flange mounting and rubber hoses for remote mounting.

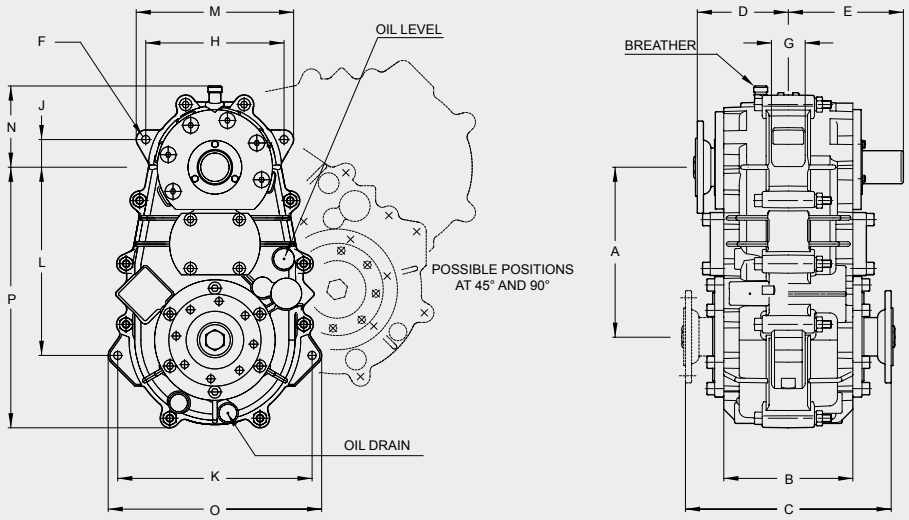

DIMENSIONS mm (inch)																	
FLANGE INPUT	FLANGE OUTPUT	A	B	C	D	E	F		G	H	J	K	L	M	N	O	P
DIN 120 SAE 1410	DIN 120 SAE 1410	225 (8.858)	168 (6.614)	268 (10.551)	120 (4.016)	144.5 (5.689)	10.5 (0.41)	4	68 (1.575)	180 (7.087)	36 (1.417)	253 (9.961)	245 (9.646)	205 (8.071)	107 (4.213)	278 (10.945)	339 (13.346)

TECHNICAL DATA					
WEIGHT w/o oil	OIL QTY.	OUTPUT ROTATION	MAX TORQUE	MAX INPUT SPEED	GEAR RATIO
30 kg (66 lb)	3 l (0.8 gal)	=INPUT	1700 Nm (1480 lbft)	3500 rpm	1.15 or 2.4

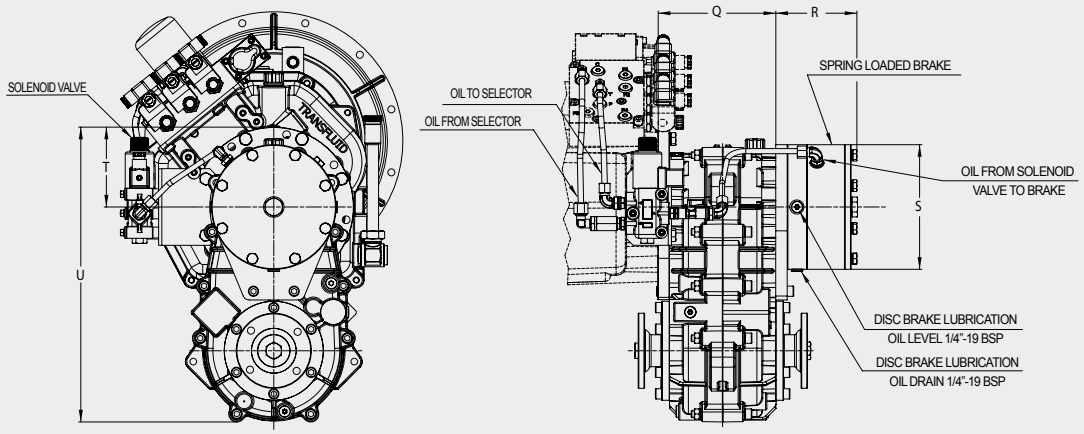

BRAKE on the drop box

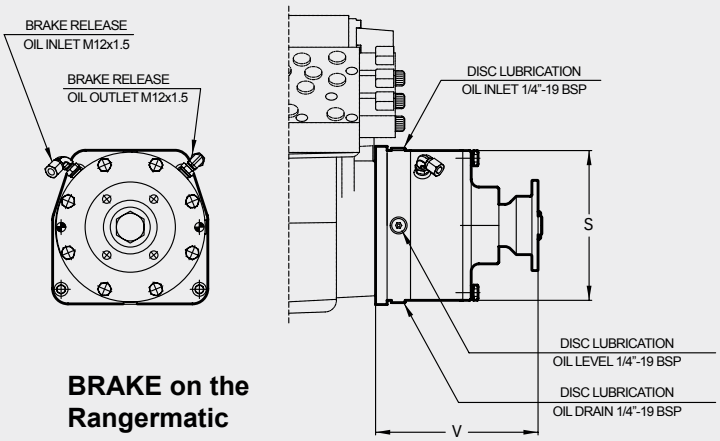

BRAKE on the Rangermatic

DIMENSIONS mm (inch)						
Q	R	S	T	U	V	SOLENOID VALVE
184 (7.244)	127 (5.000)	195 (7.677)	125 (4.921)	461.5 (18.169)	205.5 (8.091)	12/24 V 38 W

BRAKE Technical data						
WEIGHT w/o oil	OIL QTY.	TRANSMISSION OIL PRESS. SOURCE		EXTERNAL OIL PRESS. SOURCE**		
		STATIC TORQUE	OPERAT. PRESS	STATIC TORQUE	MIN.OPERAT PRESSURE	MAX.OPERAT. PRESSURE
18 kg (39.7 lb)	0.65 l (0.17 gal)	590 Nm (435 lbft)	12 bar (174 psi)	1670 Nm (1232 lbft)	23 bar (334 psi)	300 bar (4351 psi)

INCHING CONTROL: Designed for quick and easy installation Transfluid's inching control manifold can be installed next to the brake pedal eliminating cables and levers or the most suitable remote location. The connection with transmission is with simple hydraulic hoses.

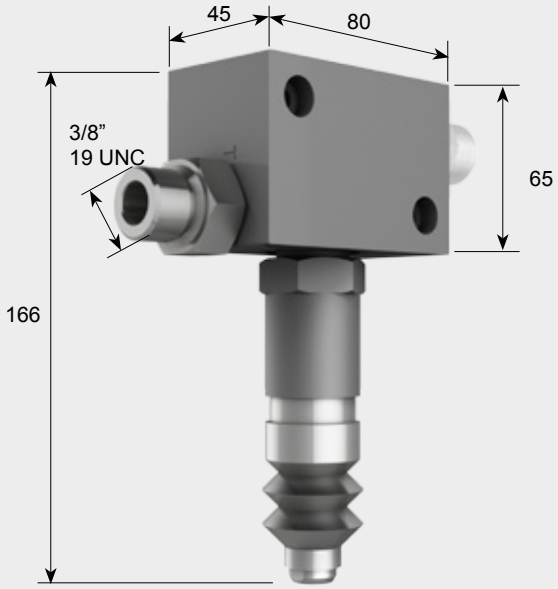

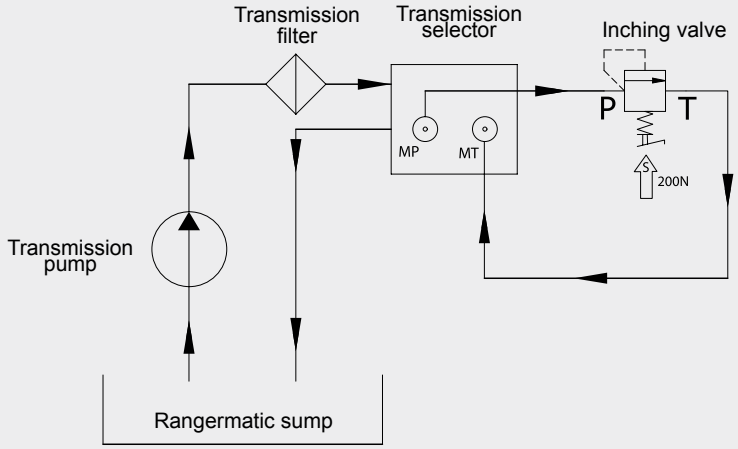

SHIFTER: Equipped with switches that interface with the solenoids on the transmission, the **Shifter** is designed to integrate the transmission controls with the electrically actuated hydraulic selectors on Rangermatic and Revermatic transmissions. Providing ease of use and quick installation the Shifter contains the required switches to correspond with each available gear of transmission.
Additionally in application where the SL750 parking brake is used, the shifter comes equipped with a P(ark) position.

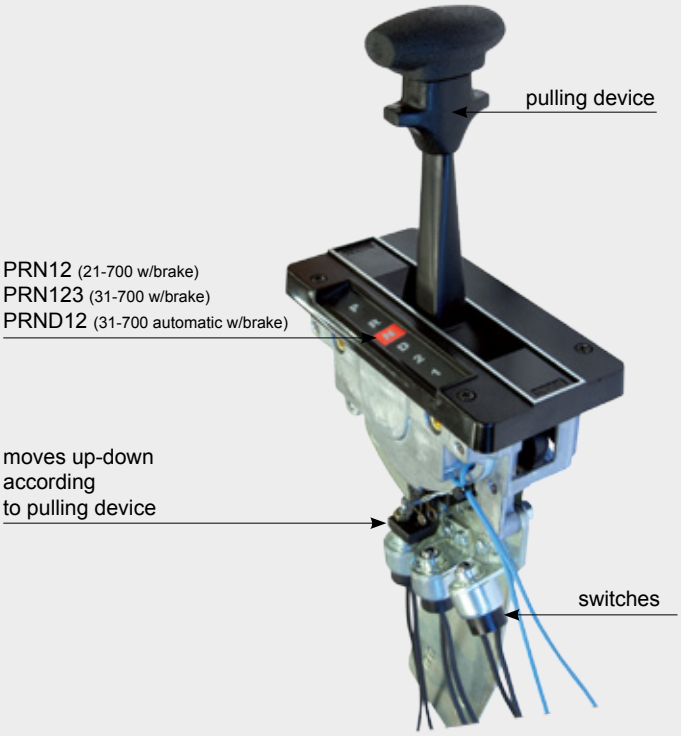

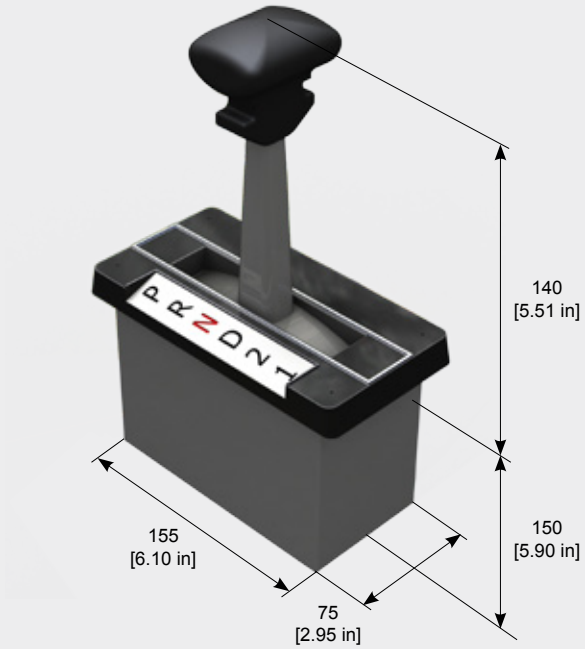

Model	31-700	21-700	22-700
Automatic w/TSC	PRND21	PRND21	/
Manual	PRN123	PRN123	P21N12

TSC: Transmission Shifting Control is a Transfluid's hardware and software original design, specifically made for easy and smooth automatic gear shifting of the three speed Rangermatic transmission. It can be connected to Transfluid's or Customer's shifter. It doesn't need any throttle pedal or engine speed signal; sensors are already integrated inside transmission casing.

Weight	0.4 kg (0.88 lb)	Voltage	12/24 Vdc
Dim. mm (inch)	134.6x153.2x52.2 (5.3"x6.03"2.05")	Operating Temp.	-30°C+80°C (-22°F+176°F)
		Protection	IP67
Material	30% Glass Polymer	Harness Interface	48 pin
Communication	CAN 2.0B Extended	SAE J1939	

Predictable performance has been achieved by dedicated development of a comprehensive Power Shift Transmission family. All new applications of a Transfluid Power shift transmissions are supported by in-depth performance calculations. Transmission and vehicle performances are known before the machine is placed in the field.

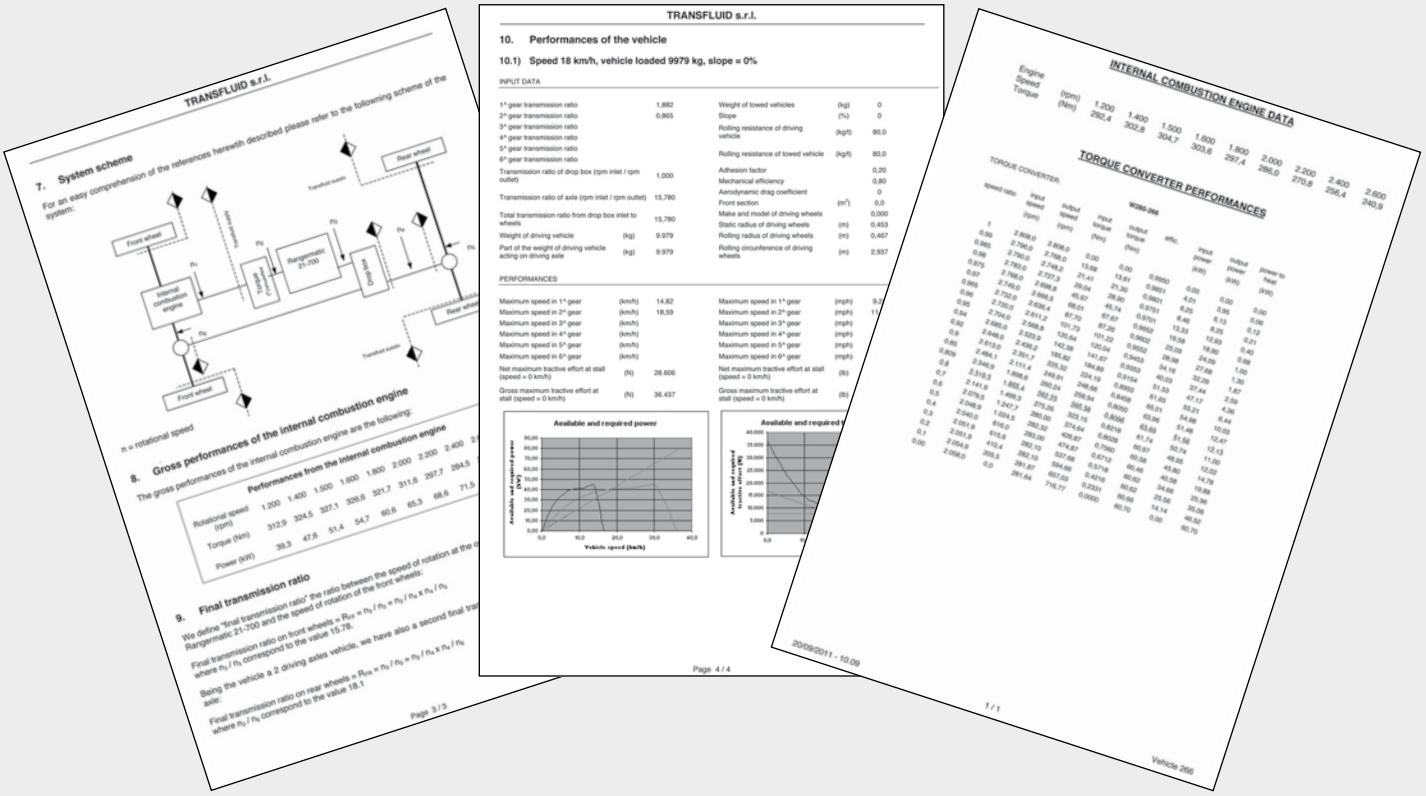

HTV700 and HTM700 HYBRID TRANSMISSION
HM560 HYBRID MODULE
(ask TRANSFLUID for specific details)

TRANSFLUID
trasmissioni industriali

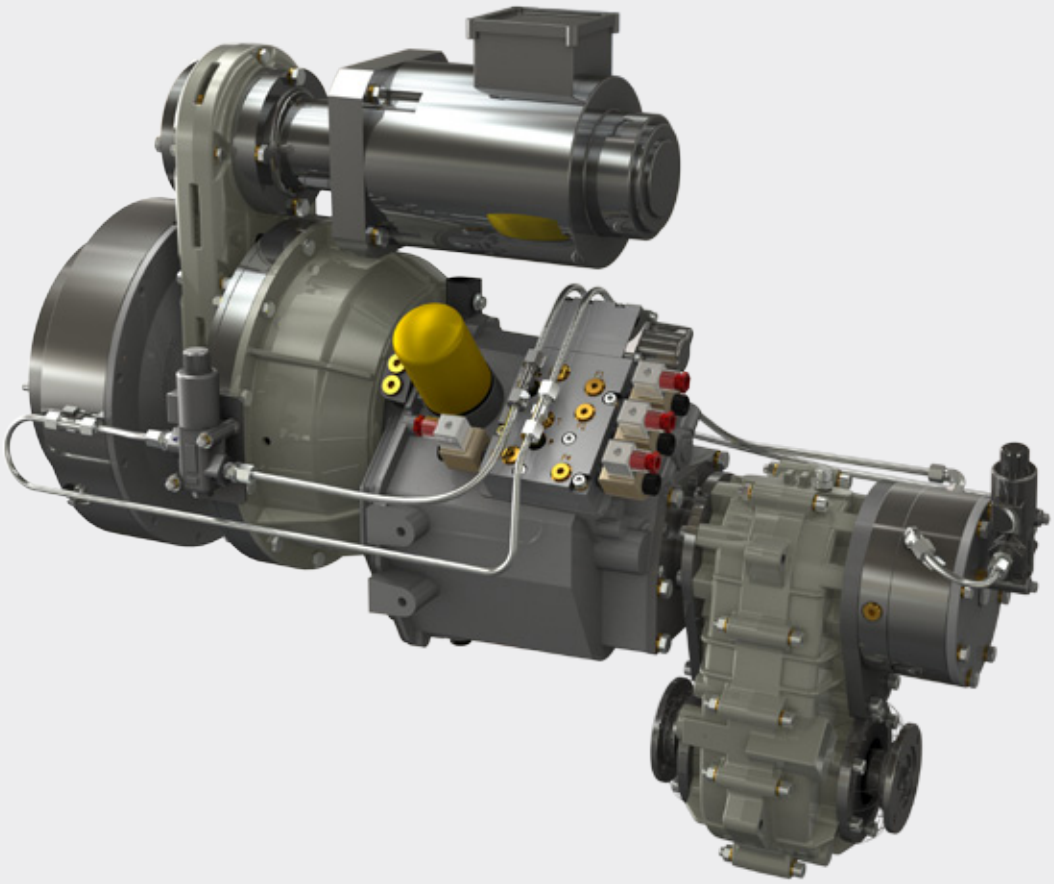

CHINA
TRANSFLUID BEIJING TRADE CO.
LTD Beijing
Ph.: +86.10.60442301-2
Fax: +86.10.60442305
tbtcinfo@sina.com

GERMANY
TRANSFLUID GERMANY GmbH
D-48529 Nordhorn
Ph.: +349 5921 7288808
Fax: +349 5921 7288809
tfgermany@transfluid.it

U.S.A
TRANSFLUID LLC
Auburn, GA 30011
Ph.: +1.770-822-1777
Fax: +1.770-822-1774
tfusa@transfluid.it

FRANCE
TRANSFLUID FRANCE s.a.r.l.
38110 Rochetoirin
Ph.: +33.9.75635310
Fax: +33.4.26007959
tffrance@transfluid.it

RUSSIA
TRANSFLUID OOO Moscow
Ph. +7.495.7782042
Mob.: +7.926.8167357
tfrussia@transfluid.it

LOCAL DISTRIBUTOR

Global webs site: www.transfluid.eu
E-commerce web site: www.buy-transfluid.com